Data Sheet
10/18-0.33-EN

# Electro-Pneumatic Positioner TZIDC-210

for PROFIBUS PA,
flameproof enclosure

- **Low operating cost**
- **Compact design**
- **Well-proven technology and intelligence**
- **Robust and environmentally ruggedized**
- **Wide operating temperature range -40 ... 85 °C**
- **Easy to commission, “single pushbutton” operating philosophy**
- **Mechanical position indicator**
- **ATEX, FM, CSA, GOST and IECEx approvals**
  - flameproof enclosure
  - intrinsically safe

## Compact, well-proven, and flexible

## Contents

**1 Description ... 3**
1.1 Pneumatics ... 3
1.2 Operation ... 3
1.3 Communication ... 3
1.4 Modular design ... 3
**2 Mounting versions ... 5**
2.1 To linear actuators in accordance with the standard ... 5
2.2 To rotary actuators in accordance with the standard ... 5
2.3 Integral mounting to control valves ... 5
2.4 Special actuator-specific mounting ... 5
**3 Operation ... 7**
3.1 General ... 7
3.2 Operator panel ... 8
**4 Communication ... 9**
4.1 General ... 9
4.2 PROFIBUS PA ... 9
4.3 Benefits of PROFIBUS communication ... 9
4.4 Positioner TZIDC-210 for PROFIBUS PA ... 9
4.5 Device management for TZIDC-210 ... 9
**5 Technical data ... 10**
5.1 Communication ... 10
5.2 Designation ... 10
5.3 Output ... 10
5.4 Travel ... 10
5.5 Air supply ... 10
5.6 Transmission data and influences ... 10
5.7 Environmental capabilities ... 11
5.8 Housing ... 11
5.9 Explosion protection ... 11
5.10 Options ... 11
5.11 Accessories ... 12
**6 Electrical connection ... 13**
**7 Dimensions ... 15**
**8 Ordering information ... 18**
8.1 Additional ordering information ... 19
8.2 Order information, accessories 1a ... 19
8.3 Order information, accessories 1b ... 20
8.4 Order information, accessories 2 ... 21
8.5 Order information, accessories 3 ... 22

# 1 Description

The TZIDC-210 is an electronically configurable positioner with communication capabilities, mounting to pneumatic linear or rotary actuators. It features a small and compact design, a modular construction, and an excellent cost-performance ratio.

Fully automatic determination of the control parameters and adaptation to the final control element yield considerable time savings and an optimal control behavior.

## 1.1 Pneumatics

An I/P module with subsequent pneumatic amplifier is used to control the pneumatic actuator. The well-proven I/P module proportionally converts the permanent electrical positioning signal from the CPU into a pneumatic signal used to adjust a 3/3-way valve.

The air flow for pressurizing or depressurizing the actuator is continuously adjusted. As a result, excellent control is achieved. When reaching the set point, the 3/3-way valve is closed in center position to minimize the air consumption.

Four different pneumatics versions are available: for single-acting or double-acting actuators, each with “fail-safe” or “fail-freeze” function.

### 1.1.1 “Fail-safe” function

If the electrical power supply fails, the positioner output 1 is depressurized, and the pneumatic actuator’s return spring moves the valve to the defined safe position. In case of a double-acting actuator the second output 2 is additionally pressurized.

### 1.1.2 “Fail-freeze” function

If the electrical power supply should fail, the positioner output 1 (and 2, if applicable) is closed and the pneumatic actuator stops (“freezes”) the valve in the current position. If compressed air supply should fail, the positioner depressurizes the actuator.

## 1.2 Operation

The positioner has a built-in operating panel providing a 2-line LCD and 4 pushbuttons for optimal local configuration, commissioning and operational monitoring.

Alternatively, the appropriate configuration program and the available communication option can be used.

## 1.3 Communication

Communication with the TZIDC-210 positioner occurs via PROFIBUS PA.

## 1.4 Modular design

The TZIDC-210 basic model can be enhanced at any time by retrofitting optional equipment. Option modules for analog or digital position feedback or a shutdown-module can be installed. Additionally, a mechanical position indicator, proximity switches or 24 V microswitches are available for indicating the position independently of the mother board function.

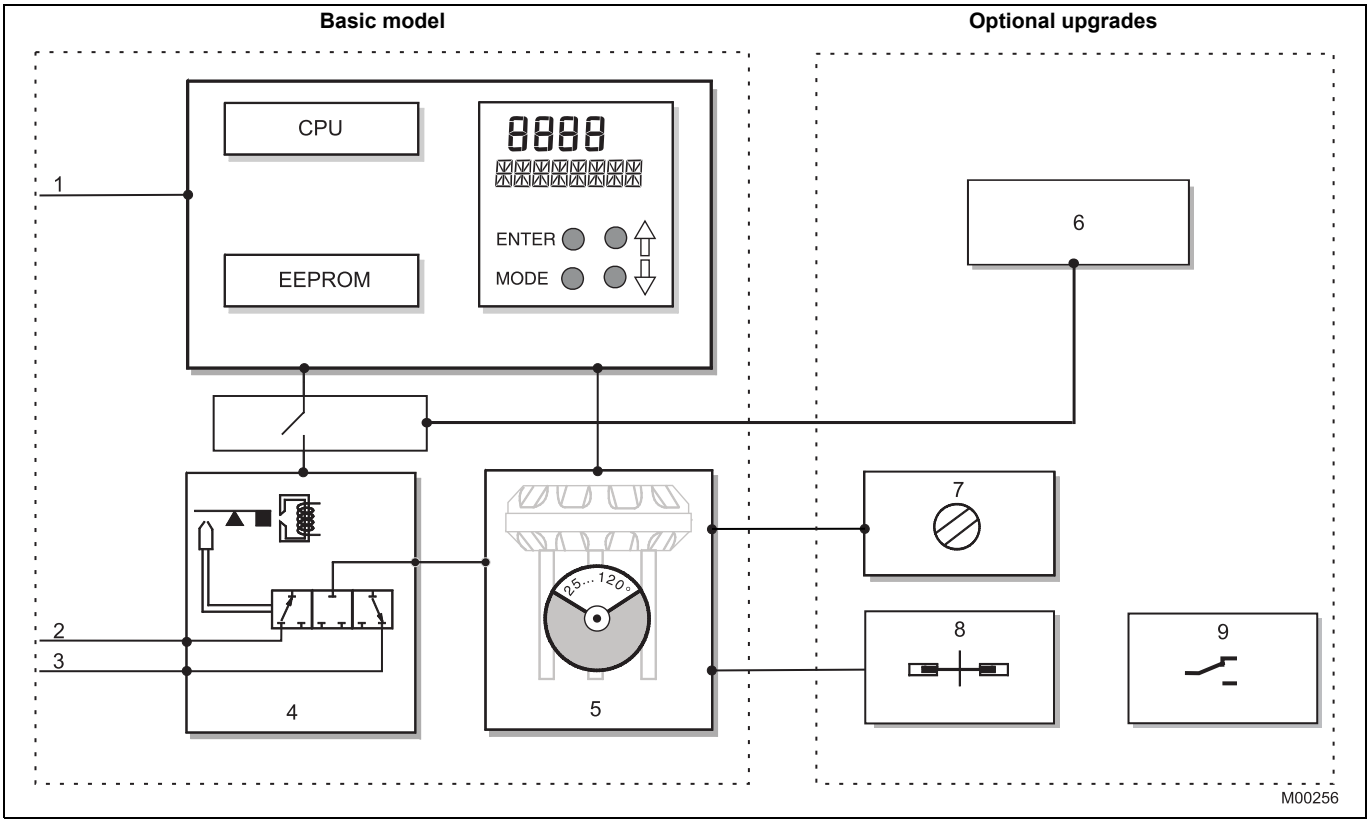


Fig. 1: TZIDC-210 schematic diagram

**Basic model**

1 Bus connector
2 Supply, 1.4 … 6 bar
3 Exhaust
4 I/P module with 3/3-way valve
5 Position sensor (optional up to 270° rotation angle)

**Optional upgrades**

6 Plug-in module for safety shutdown (forced depressurization)
7 Mechanical position indicator
8 Mechanical feedback with proximity switches
9 Mechanical feedback with microswitches 24 V

**Note**

With optional upgrades either the “mechanical feedback with proximity switches” (8) or the “mechanical feedback with microswitches 24 V” (9) can be used.

In both cases, the “mechanical position indicator” (7) must be installed.

# 2 Mounting versions

## 2.1 To linear actuators in accordance with the standard

Lateral attachment is in accordance with DIN / IEC 534 (lateral attachment to NAMUR). The required attachment kit is a complete set of attachment material, but does not include the screwed pipe connections and air pipes.

## 2.2 To rotary actuators in accordance with the standard

This attachment is designed for mounting according to the standard VDI/VDE 3845. The attachment kit consists of a console with mounting screws for mounting on a rotary actuator. The adapter for coupling the positioner feedback shaft to the actuator shaft has to be ordered separately. Screwed pipe connections and air pipes have to be provided on site.

## 2.3 Integral mounting to control valves

The TZIDC-210 positioner featuring standard pneumatic action is available as an option for integral mounting.

The required holes are found at the back of the device.

The benefit of this design is that the point for mechanical stroke measurement is protected and that the positioner and actuator are linked internally. No external tubing is required.

## 2.4 Special actuator-specific mounting

In addition to the mounting methods described above, there are special actuator-specific attachments.

Please contact us for details.

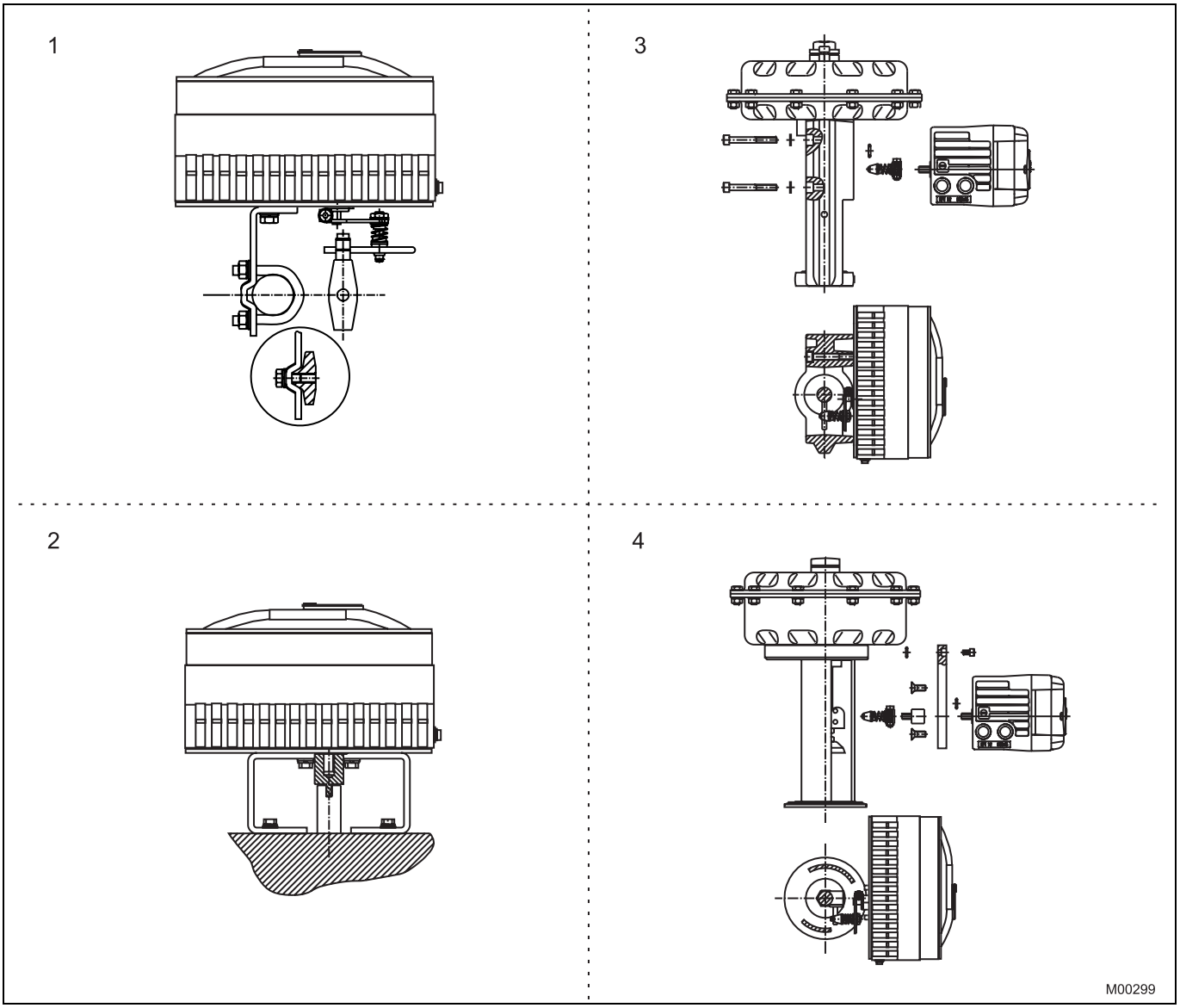


Fig. 2: Mounting options

1 Mounting to linear actuators acc. to DIN / IEC 534
2 Mounting to rotary actuators to VDI / VDE 3845
3 Integral mounting to control valves
4 Integral mounting to control valves by using an adapter panel

# 3 Operation

## 3.1 General

Microprocessor-based position control in the TZIDC-210 provides for optimal results. The positioner features high-precision control functions and high operational reliability. Due to their elaborate structure and easy accessibility, the device parameters can be quickly adapted to the respective application.

**The total range of parameters includes:**

- Operating parameters
- Adjustment parameters
- Monitoring parameters
- Diagnosis parameters
- Maintenance parameters

### 3.1.1 Operating parameters

**Signal range 0 ... 100%**

Subranges are configurable, min. range 20 %

Recommended range > 50 %

**Action (positioning signal)**

Increasing: Positioning signal 0 ... 100 % = direction 0 ... 100 %

Increasing: Positioning signal 0 ... 100 % = direction 100 ... 0 %

**Characteristic curve (travel = f {signal})**

Linear, equal percentage 1:25 or 1:50 or 25:1 or 50:1 or freely configurable with 20 reference points.

**Travel limit**

The positioning travel, i.e. the stroke or angle of rotation, can be reduced as required within the full range of 0 ... 100 %, provided that a minimum value of 20 % is observed.

**Shut-off function**

This parameter can be set separately for each end position. When the respective configured limit value is exceeded, the shut-off function causes immediate travel of the actuator until reaching the set end position.

**End Position Behavior**

Selection option for behavior when moving into the end position. Either the positioner additionally pressurizes the actuator and reaches full actuating force in the end position, or it continues to control the actuator in the end position and pressurizes the actuator only as much as is required to maintain the position.

**Travel time prolongation**

This function can be used to increase the max. travel time for full travel. This time parameter can be set separately for each direction.

**Note**

This function can only be used with the pneumatics with the safety function “fail-safe”.

**Switching points for the position**

This parameter allows you to define two position limits for signaling (see option “Module for digital position feedback”).

### 3.1.2 Adjustment parameters

The TZIDC-210 positioner has a special function for automatic adjustment of the parameters.

Additionally, the control parameters can be set manually to optimally adapt them to the process requirements.

**Tolerance band**

When reaching the tolerance band the position is considered as corrected. From this point on, the position is further slowly re-adjusted until the dead band is reached. The factory setting for this parameter is 0.3 %.

**Dead band (sensitivity)**

When reaching the dead band, the position is held. The factory setting for this parameter is 0.1 %.

**Actuator spring action**

Selection of the sensor shaft rotating sense (looking into the open case), if the valve is moved to the safe position by the actuator spring (actuator is depressurized via Y1/OUT1).

For double-acting actuators the actuator spring action corresponds to pressurizing the pneumatic output (OUT2).

**Display 0 … 100 %**

Adjusting the display (0 ... 100%) according to the direction of action for opening or closing the valve.

### 3.1.3 Monitoring parameters

Various functions for permanent operational monitoring are implemented in the TZIDC-210 operating program, e.g.:

- Internal positioning time-out
- Sensor monitoring
- Backup monitoring

While automatic commissioning is in progress, the current state is continuously indicated on the integrated LCD. Remaining messages can be retrieved via the user interface.

The fieldbus enables users to implement enhanced monitoring in the control system. A special window displays the most important process variables ONLINE such as the positioning signal (in %), the position (in %), the control deviation (in %) as well as the status messages.

### 3.1.4 Diagnosis parameters

The diagnosis parameters of the TZIDC-210 program inform the operator about the operating conditions of the valve.

From this information the operator can derive which maintenance works are required, and when.

Additionally, limit values can be defined for these parameters. When they are exceeded, an alarm is reported.

The following values are e.g. determined:

- Number of movements performed by the valve
- Total travel

The diagnostic parameters and limit values can be called up, set and reset using the configuration program.

## 3.2 Operator panel

The TZIDC-210 positioner's operator panel with four pushbuttons allows for

- operational monitoring
- manual control
- configuration
- fully automatic commissioning

The operator panel is protected by a hinged cover which can be opened during operation even in hazardous areas, i.e. the positioner can be locally operated any time as required.

### 3.2.1 Single-button commissioning

Commissioning the TZIDC-210 positioner is especially easy. The standard Autoadjust function for automatic adaptation of the device parameters can be started by simply pressing a single front panel button, and without knowing parameterization details.

Depending on the selected actuator type (linear or rotary), the displayed zero position is automatically adapted:

- for linear actuators counter-clockwise (CTCLOCKW)
- for rotary actuators clockwise (CLOCKW).

Besides this standard function, a customized "Autoadjust" function is available. The function is launched either via the operator's panel or the configuration program.

### 3.2.2 Display

The information indicated by the 2-line LCD is permanently updated and adapted during operation, to inform the operator in an optimal way.

During control operation the following TZIDC-210 data can be called up by pressing the pushbuttons briefly:

| | |
|---|---|
| Up button | Cyclic communication:<br>- Setpoint (%)<br>- Setpoint status<br>Acyclic communication:<br>- Status of communication |
| Down button | Operating mode on the bus and bus address |
| Enter | Software Version |

Fig. 3: TZIDC-210 with removed cover, view of the operator panel

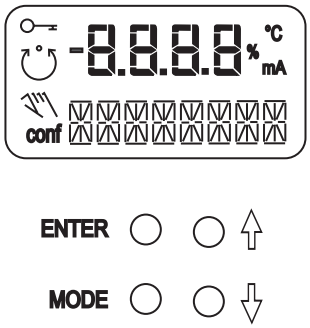


Fig. 4: TZIDC-210 operating elements and display

# 4 Communication

## 4.1 General

PROFIBUS is a manufacturer-independent, open fieldbus standard for use in the manufacturing industry and process automation. It is ideally suited for time-critical applications with high transmission rates as well as for complex communication activities. The flexible structure allows the mechanical mount and transmission speed to be easily adapted to the specific application. A standard communication protocol is used on a universal basis.

## 4.2 PROFIBUS PA

PROFIBUS PA was developed primarily for process automation solutions.

The transmission method (physical layer in the ISO/OSI model) complies with IEC 61158. The power supply for the field devices is provided concurrent with signal transmission via the fieldbus line. PROFIBUS PA is also suited for use in explosion-proof installations.

## 4.3 Benefits of PROFIBUS communication

- Standardized device profiles ensure interoperability of devices from various manufacturers
- Acyclic access to device data (even during operation) for configuration, diagnostics and service
- High system uptimes based on comprehensive device and bus diagnostics as well as default value strategies in the event of an error
- Support for efficient facility management through provision of operating values

## 4.4 Positioner TZIDC-210 for PROFIBUS PA

The TZIDC-210 positioner complies with the Profibus PA profile for process devices “Electro-pneumatic actuators V3.0”. This ensures interoperability in connection with third-party control systems.

In conformance with PROFIBUS conventions, data can be output during cyclic data transfer in operating modes AUT, MAN or RCAS and can be written in operating mode O/S (out-of-service).

Newly set parameters are saved in the non-volatile memory directly upon download to the device, and become active immediately.

## 4.5 Device management for TZIDC-210

For the TZIDC-210, a graphic user interface known as the “DTM” is available. The DTM is based on FDT/DTM technology (FDT 1.2) and can be integrated in a control system as well as a separate PC with the DVS401 configuration software (SMART VISION). The device can thus be commissioned, operated and serviced from a single user interface.

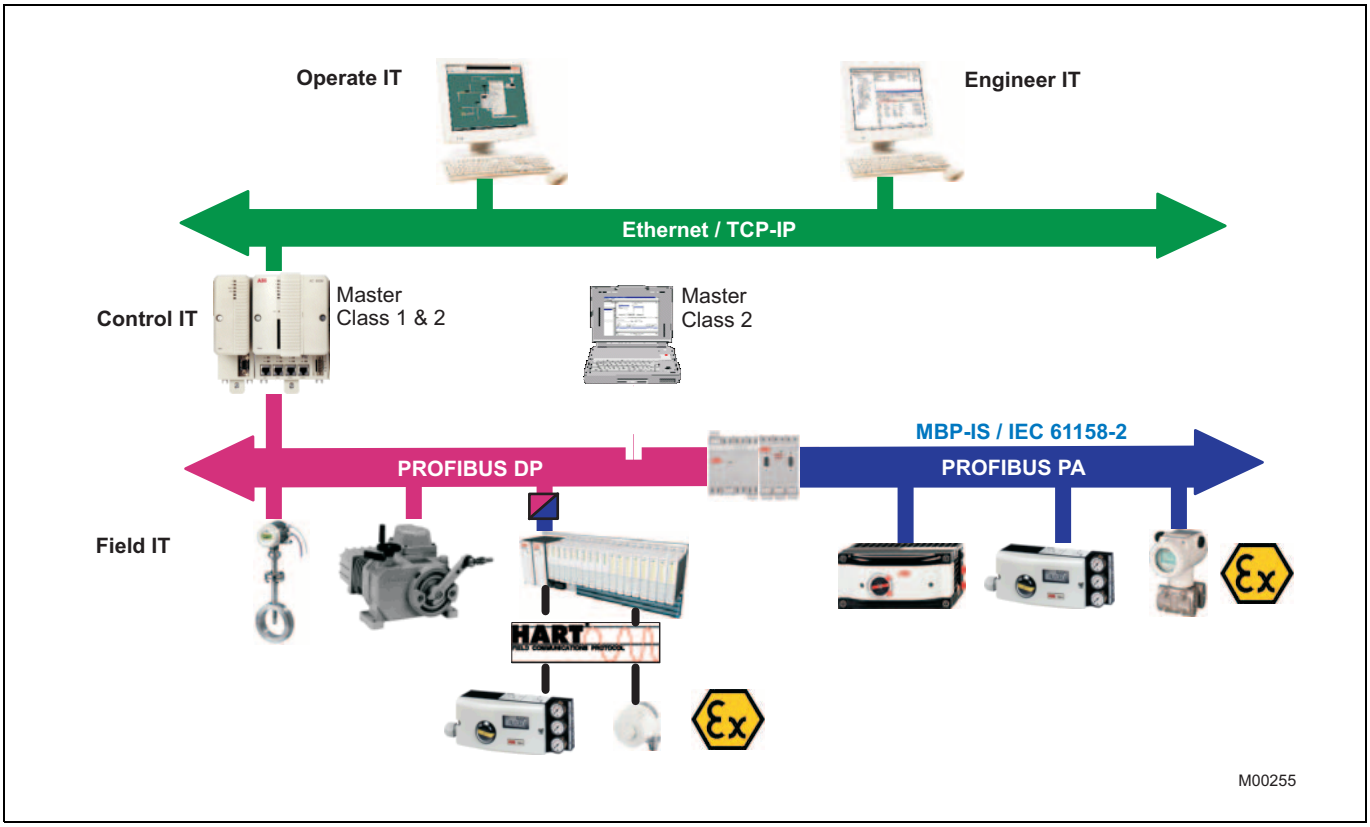


Fig. 5: Communication via PROFIBUS

# 5 Technical data

## 5.1 Communication

| | |
|---|---|
| **Profiles** | Profibus PA profile for process devices<br>Electro-pneumatic actuators V3.0 |
| **Block types** | 1 AO Functional block<br>1 Transducer block<br>1 physical block |
| **Physical Layer** | In compliance with IEC 61158-2 |
| **Transmission rate** | 31.25 Kbit/s |
| **Supply voltage** | Power feed from the PA bus,<br>9.0 ... 32.0 V DC |
| **Max. permissible voltage** | 35 V DC |
| **Power consumption** | 10.5 mA |
| **Current in the event of an error** | 15 mA (10.5 mA + 4.5 mA) |

## 5.2 Designation

| | |
|---|---|
| **Device name** | TZIDC-210 |
| **PNO ID no.** | 0x0639 |
| **Dev. ID** | 0X3200028xyz |
| **Bus address** | Between 0 and 126, default address 126 |

## 5.3 Output

| | |
|---|---|
| Range | 0 …6 bar (0 … 90 psi) |
| Air capacity | at 1.4 bar (20 psi) supply pressure<br>5.0 kg/h = 3.9 $Nm^3/h$ = 2.3 scfm<br>at supply pressure of 6 bar (90 psi)<br>13 kg/h = 10 $Nm^3/h$ = 6.0 scfm |
| Output function | For single or double-acting actuators, air is vented from actuator or actuator is blocked in case of (electrical) power failure |
| Shut-off values | end position 0 % = 0 … 45 %<br>end position<br>100 % = 55 … 100 % |

## 5.4 Travel

**Rotation angle**

Used range

| | |
|---|---|
| 25 … 120° | (rotary actuators, optionally 270°) |
| 25 … 60° | (linear actuators) |

**Travel time prolongation**

| | |
|---|---|
| Setting range | 0 ... 200 seconds, separately for each direction |

## 5.5 Air supply

| | |
|---|---|
| **Instrument air** | free of oil, water and dust acc. to DIN / ISO 8573-1<br>pollution and oil content according to Class 3 (purity: max. particle size: 5 µm, max. particle density: 5 mg / $m^3$; oil content: max. concentration: 1 mg / $m^3$; pressure dew point: 10 K below operating temperature |
| **Supply pressure** | 1.4 ... 6 bar (20 ... 90 psi)<br>Note: Do not exceed the max. operating pressure of the actuator! |
| **Air consumption** | < 0.1 kg/h / 0.05 scfm (independent of supply pressure) |

## 5.6 Transmission data and influences

**Output Y1**

| | |
|---|---|
| Increasing: | Increasing output signal 0 ... 100 %<br>Increasing pressure at output Y1 |
| Increasing: | Increasing output signal 0 ... 100 %<br>Decreasing pressure at output Y1 |

**Action (positioning signal)**

| | |
|---|---|
| Increasing: | Signal 4 ... 20 mA = actuator position 0 ... 100 % |
| Increasing: | Signal 20 ... 4 mA = actuator position 0 ... 100 % |

| | |
|---|---|
| Characteristic deviation | ≤ 0,5 % |
| Tolerance band | 0.3 ... 10 %, adjustable |
| Dead band | 0,1 ... 10 %, adjustable |
| Resolution (A/D conversion) | > 16000 steps |
| Sample rate | 20 ms |
| Influence of ambient temperature | ≤ 0.5 % per 10 K |
| Influence of vibration | ≤ ± 1 % to 10 g and 80 Hz |

**Seismic requirements**
Meets requirements of DIN / IEC 68-3-3 Class III for strong and strongest earthquakes.

**Influence of mounting orientation**
Not measurable.

**Meets the requirements of the following directives**
- EMC Directive 89 / 336 / EWG as of May 1989
- EC Directive for CE conformity marking

## 5.7 Environmental capabilities

**Ambient temperature**

| | |
|---|---|
| For operation, storage and transport: | -40 … 85 °C |
| When using proximity switches SJ2-S1N (NO): | -25 … 85 °C |

**Relative humidity**

| | |
|---|---|
| Operational (with closed housing and air supply switched on): | 95 % (annual average), condensation permissible |
| Transport and storage: | 75 % (annual average), non-condensing |

## 5.8 Housing

**Material/Protections**
Aluminum, protection class IP 65 / NEMA 4X

**Surface/color**
Electrostatic dipping varnish with epoxy resin, stove-hardened. Case varnished black, RAL 9005, matte, housing cover Pantone 420.

**Electrical connections**
Screw terminals: Max. 1.0 mm² for options,
Max. 2.5 mm² for bus connection.
Note: Do not expose the terminals to strain.
Cable entry: 2 tap holes 1/2-14 NPT or
M20 x `1.5 (cable gland or pipe plug must be ordered separately)

**Pneumatic connections**
Threads G 1/4 or 1/4-18 NPT

**Weight**
3,0 kg

**Mounting orientation**
any orientation allowed

**Dimensions**
see dimensional drawings

## 5.9 Explosion protection

**Note**
The values indicated here are taken from the respective approval certificates.
Always observe the specifications and supplements in the certificates.
(see operating instructions).

**FM Approval HLC 7/04 3019164**
Explosion proof; enclosure 4X; T5, max. 82 °C
CL I; Div 1; Grp. C-D

Dust ignition-proof; enclosure 4X; T5; max. 82 °C
CL II, III; Div 1; Grp. E-F-G

**CSA Certification 1555690**
Explosion proof; enclosure 4X
Temperature range: -40 … 85 °C
T5, max. 85 °C ; T6, max. 70 °C
CL I; Div 1; Grp. C-D
CL II; Div 1; Grp. E-F-G
CL III

| **ATEX / GOST Ukraine** | **II 2G EEx d II C T4/T5/T6** |
|---|---|
| Prototype test certificate: | DMT 02 ATEX E 029 X |
| Type: | Flameproof enclosure |
| Device class: | II 2G (EEx ib IIC) |
| Temperature class: | T4, T5, T6 |
| Permissible ambient temperature: | T4: -40 °C < $T_{amb}$ < 85 °C |
| | T5: -40 °C < $T_{amb}$ < 80 °C |
| | T6: -40 °C < $T_{amb}$ < 65 °C |

| **ATEX** | **II 2G EEx ia IIC T6** |
|---|---|
| Prototype test certificate: | TÜV 02 ATEX 1831 X |
| Type: | Intrinsically safe equipment |
| Device class: | II 2G (EEx ia IIC) |
| Temperature class: | T4, T5, T6 |
| Permissible ambient temperature: | T4: -40 °C < $T_{amb}$ < 85 °C |
| | T5: -40 °C < $T_{amb}$ < 55 °C |
| | T6: -40 °C < $T_{amb}$ < 40 °C |

| **IECEx** | **Ex ia IIC T6** |
|---|---|
| Prototype test certificate: | IECEx TUN 04.0015X, Issue no.: 0 |
| Type: | Intrinsically safe |
| Temperature class: | T4, T5, T6 |
| Permissible ambient temperature: | T4: -40 °C < $T_{amb}$ < 85 °C |
| | T5: -40 °C < $T_{amb}$ < 55 °C |
| | T6: -40 °C < $T_{amb}$ < 40 °C |

Signal circuit for PROFIBUS PA only for connecting a certified intrinsically safe circuit (e.g., FISCO power supply or barriers) with max. values acc. to:

| | **FISCO power supply ia/ib for Grp. IIB/IIC** | **FISCO power supply ia/ib for Grp. IIB/IIC** | **Barriers or power supply ia/ib for Grp. IIB/IIC** |
|---|---|---|---|
| Voltage | Ui = 17.5 V | Ui = 17.5 V | Ui = 24 V |
| Current | Ii = 380 mA | Ii = 360 mA | Ii = 250 mA |
| Power | Pi = 5.32 W | Pi = 2,52 W | Pi = 1,2 W |
| Characteristic | rectangular | trapezoidal | linear |

## 5.10 Options

**Module for the emergency shutdown function**

| | |
|---|---|
| Supply voltage | 24 V DC (20 ... 30 V DC) (galvanically isolated from input signal) |
| Safe position is activated when | voltage < 5 V |
| Explosion protection | see certificate (operating instructions) |

A separate 24 V DC signal is normally applied to the emergency shutdown module, which connects through the signal from the microprocessor to the I/P module.
When the 24 V DC signal is interrupted, the pneumatic module executes the respective safety function, depending on the mechanical construction:

The positioner output Y1 is depressurized, and the valve is moved to the safe position. In case of a double-acting actuator the second output Y2 is additionally pressurized.

**Note**
The emergency shutdown module can only be used with pneumatics with the safe position “fail-safe”.

The emergency shutdown module works independently of the mother board, i.e. all information from the final control element is available in the supervisory process control system at any time.

**Digital position feedback with proximity switches[1)]**

Two proximity switches for independent position signaling. Switching points adjustable between 0 … 100 %

Current circuits acc. to DIN 19234 / NAMUR

| | |
|---|---|
| Supply voltage | 5 ... 11 V DC |
| Signal current < 1 mA | Switching state logical “0“ |
| Signal current > 2 mA | Switching state logical “1“ |

**Direction of action (logical state)**

| | Position | | | |
|---|---|---|---|---|
| Proximity switch | < Lim. 1 | > Lim. 1 | < Lim. 2 | > Lim. 2 |
| SJ2-SN (NC) | 0 | 1 | 1 | 0 |
| SJ2-S1N (NO) | 1 | 0 | 0 | 1 |

**Note**
When using SJ2_S1N (NO), the TZIDC positioner may only be used at an ambient temperature range from -25 ... 85 °C.

**Digital position feedback with 24 V microswitches[1)]**

Two microswitches for independent position signaling. Switching points adjustable between 0 … 100 %.

| | |
|---|---|
| Voltage | max. 24 V AC / DC |
| Load rating | max. 2 A |
| Contact surface | 10 µm Gold (AU) |

**Mechanical position indicator**

Indicator disk in enclosure cover, linked with positioner feedback shaft through magnetic coupling.

**Note**
These options are also available for retrofitting by Service.

1) The proximity switches or 24 V microswitches for digital feedback are activated directly via the positioner axis and can only be used in combination with the optionally available mechanical position indicator.

## 5.11 Accessories

**Mounting material**

Attachment kit for linear actuators to DIN/IEC 534 / NAMUR

Attachment kit for rotary actuators to VDI/VDE 3845

Attachment kit for integral mounting to control valves

Attachment kit for actuator-specific attachment upon request

**Pressure gauge block**

With pressure gauges for supply and output pressure. Pressure gauges with housing ø 28 mm, with connection block in aluminum, black with installation material for mounting to TZIDC-210.

**Filter regulator**

All metal version, brass varnished black. Filter element: Bronze, 40 µm, with condensate drain.

max. pre-pressure 16 bar, output adjustable to 1.4 ... 6 bar

**PC software for configuration and operation**

DSV401 (SMART VISION) with DTM for TZIDC-110 / TZIDC-210 available on CD ROM (see data sheet 63-1.20 EN)

# 6 Electrical connection

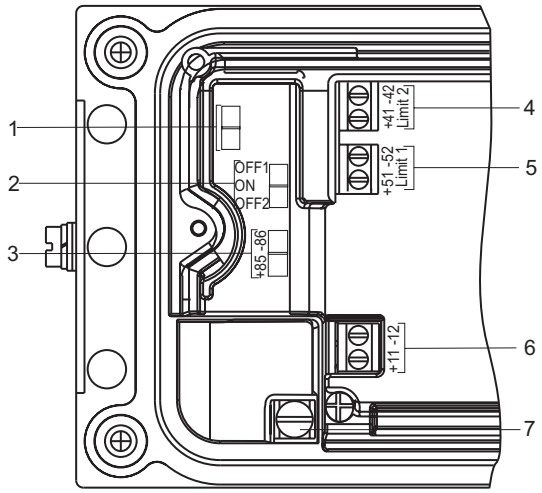


Fig. 6: Screw terminals, overview

1 Not assigned
2 Service switch for emergency shutdown module
3 Terminals of the shutdown module
4 Digital position feedback, either proximity switches or 24 V microswitches
5 Same as 4
6 Bus connector
7 Grounding screw

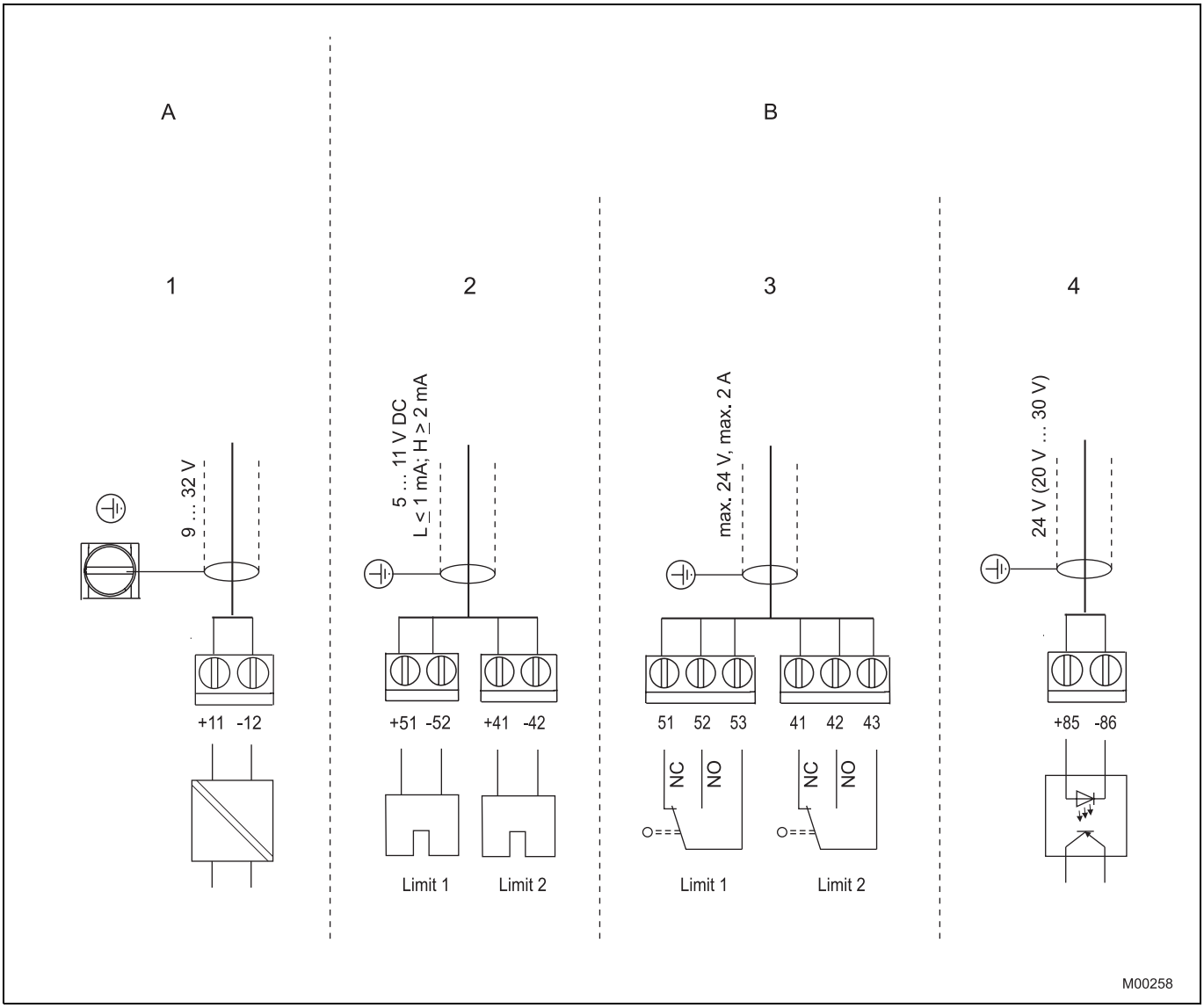


Fig. 7: Pin configuration

A Basic model
B Options

1 Fieldbus, bus feed
2 Proximity switches
3 Microswitches
4 Emergency shutdown module

**Note**
Keep cable shields as short as possible and connect on both sides.

# 7 Dimensions

All dimensions in mm (inch)

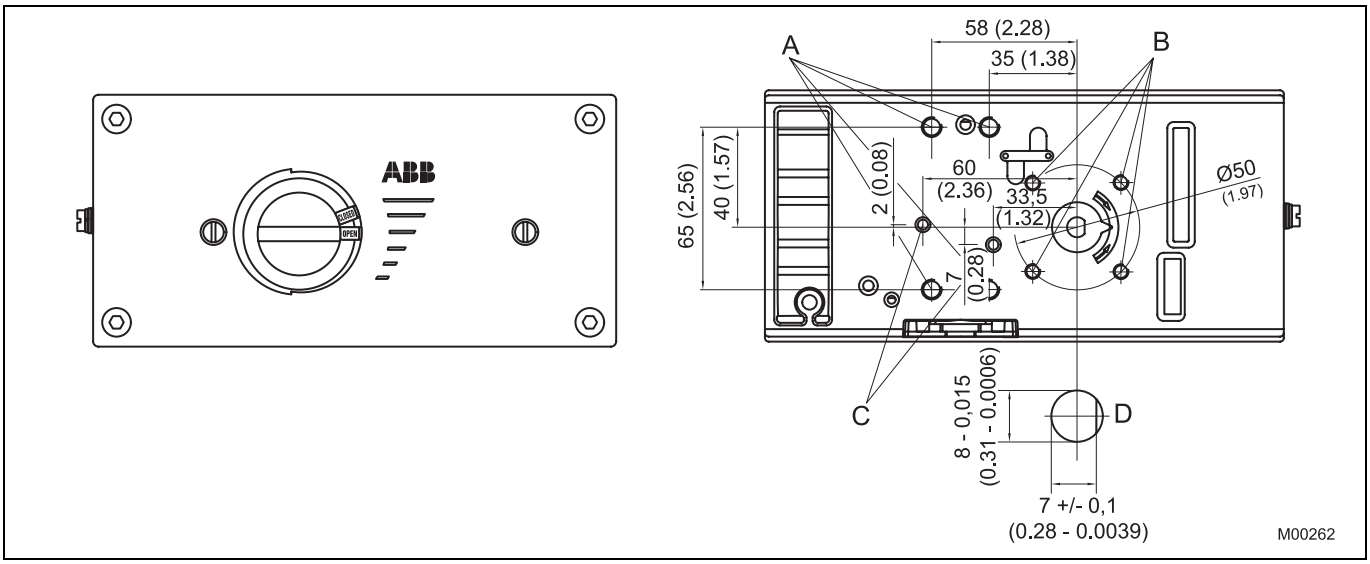


Fig. 8: Top view

A Tap hole M8 (10 mm low)
B Tap hole M6 (8 mm low)
C Tap hole M5 x 0.5 (air connections in version for integral mounting)
D Sensor shaft (larger than scale)

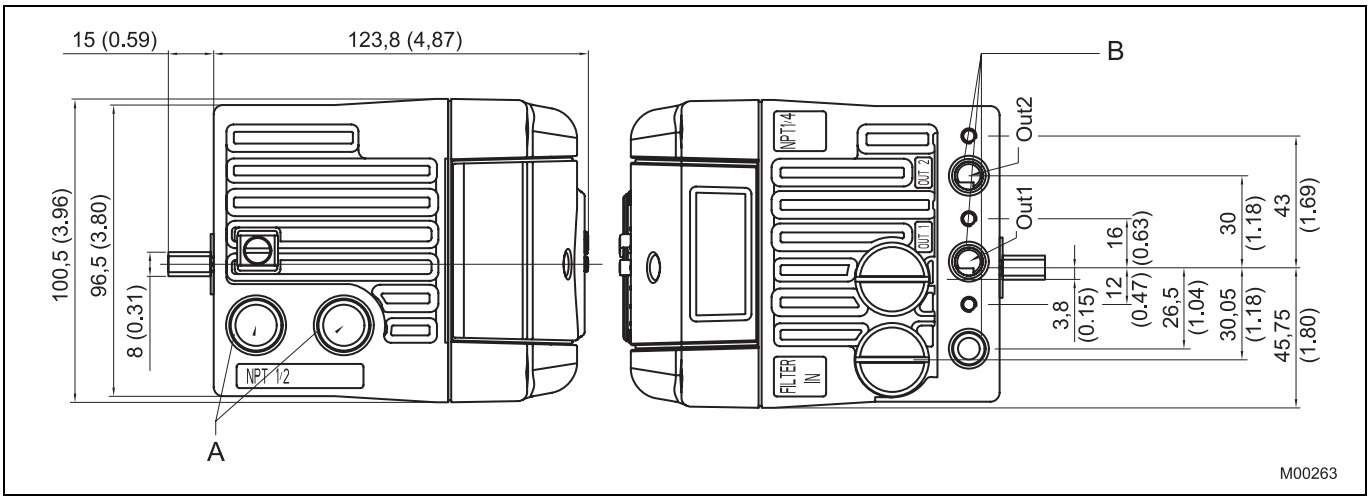


Fig. 9: Left and right side view

A NPT ½” or M20 x 1.5
B Pneumatic connections, NPT ¼“ -18 or G1/4“

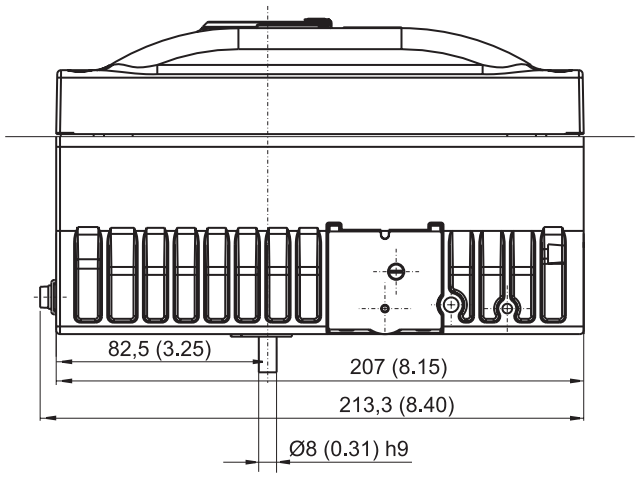


Fig. 10: Bottom view

A Pneumatic connections, NPT 1/4"-18 or G1/4"

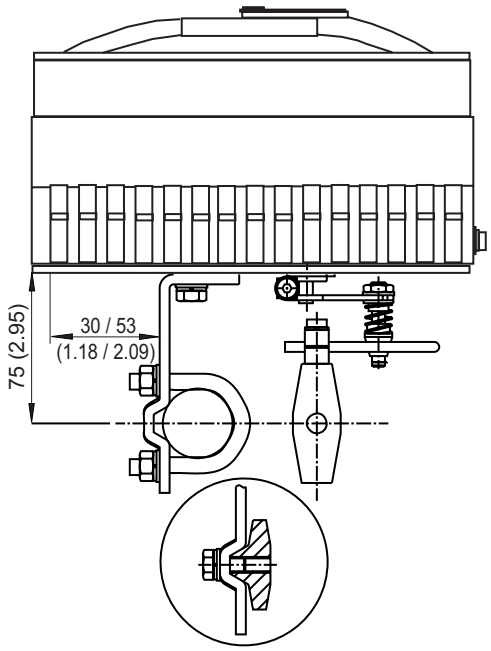


Mounting to linear actuators to DIN/IEC 534

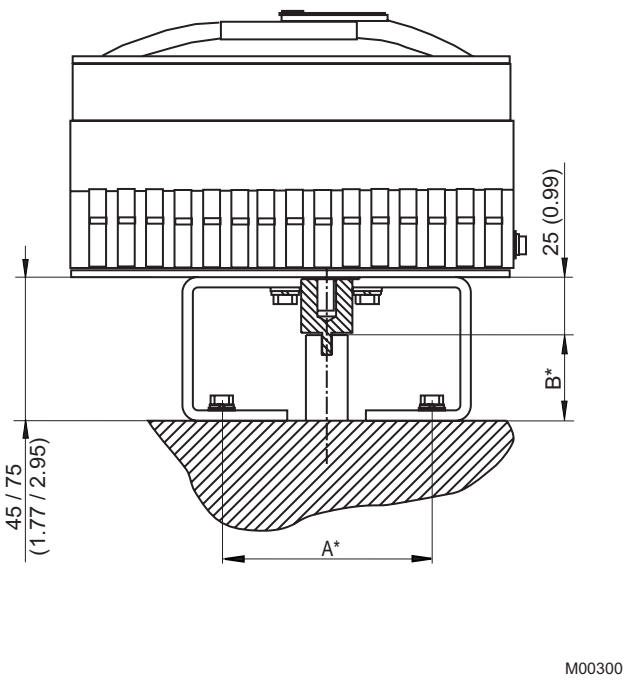


Mounting to rotary actuators to VDI/VDE 3845
*) Dimensions A and B are dependent on the rotary actuator

Fig. 11: Mounting drawings

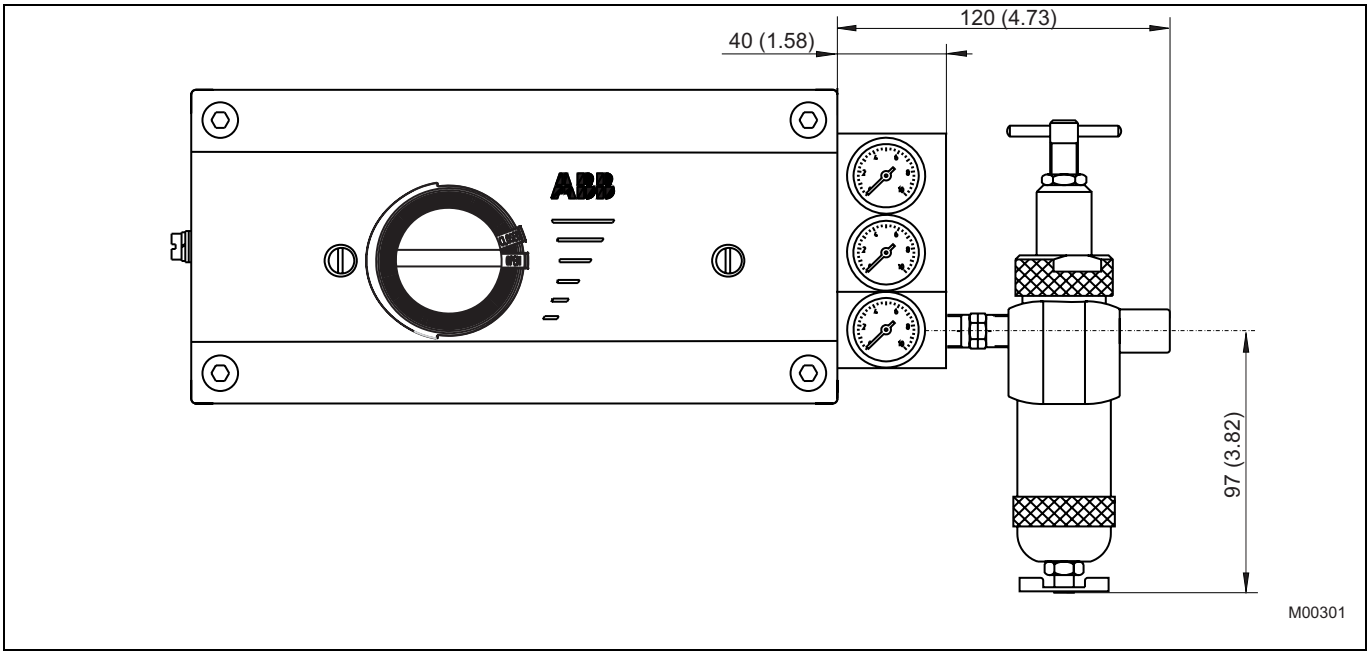


Fig. 12: Positioner TZIDC-210 with pressure gauge block and filter regulator

# 8 Ordering information

| **Electro-Pneumatic Positioner** Variant digit No. | 1 - 7 | 8 | 9 | 10 | 11 | 12 | 13 | 14 | 15 | 16 | 17 | 18 | Code | | | |
|---|---|---|---|---|---|---|---|---|---|---|---|---|---|---|---|---|
| **TZIDC-210** with Flameproof Enclosure Catalog No. | **V18349-** | | **0** | | | | | | | **3** | | | | | | |
| for PROFIBUS PA, intelligent, software-configurable | | | | | | | | | | | | | | | | |
| **Case / Mounting** | | | | | | | | | | | | | | | | |
| Case made of aluminium, varnished, protection IP 65 (NEMA 4X) | | | | | | | | | | | | | | | | |
| for mounting to linear actuators acc. to DIN/IEC 534 / NAMUR | | | | | | | | | | | | | | | | |
| or to rotary actuators acc. to VDI/VDE 3845 | | 1 | | | | | | | | | | | | | | |
| as above, but with mechanical position indicator | | 2 | | | | | | | | | | | | | | |
| for integral mounting to control valves | | 3 | | | | | | | | | | | | | | |
| as above, but with mechanical position indicator | | 4 | | | | | | | | | | | | | | |
| for mounting to rotary actuators acc. to VDI/VDE 3845 | | | | | | | | | | | | | | | | |
| with extended rotation angle up to 270° | | 5 | | | | | | | | | | | | | | |
| as above, but with mechanical position indicator | | 6 | | | | | | | | | | | | | | |
| See Options/Accessories for customer-specific mounting | | | | | | | | | | | | | | | | |
| Please specify the actuator tye and type of mounting | | | | | | | | | | | | | | | | |
| **Note:** | | | | | | | | | | | | | | | | |
| Special mounting material is required | | | | | | | | | | | | | | | | |
| (see "Accessories") | | | | | | | | | | | | | | | | |
| **Operation** | | | | | | | | | | | | | | | | |
| with operator panel and display integrated in the enclosure cover | | | | 1 | | | | | | | | | | | | |
| **Explosion protection** | | | | | | | | | | | | | | | | |
| ATEX Ex II 2 G EEx d IIC T4, T5, T6 | | | | | 1 | | | | | | | | | | | |
| FM/CSA Class 1, Div. 1, Group C-D (explosion-proof) | | | 1) | | 2 | | | | | | | | | | | |
| ATEX EEx ia IIC T6 and EEx d IIC T4, T5 ,T6 | | | | | 3 | | | | | | | | | | | |
| IECEx Ex ia IIG T6 | | | | | 5 | | | | | | | | | | | |
| Other explosion protection certificate upon request | | | | | | | | | | | | | | | | |
| **Output / safe position (in case of an electrical power failure)** | | | | | | | | | | | | | | | | |
| Single acting, fail safe | | | | | | 1 | | | | | | | | | | |
| fail freeze | | | | | | 2 | | | | | | | | | | |
| Double acting, fail safe | | | | | | 3 | | | | | | | | | | |
| fail freeze | | | | | | 4 | | | | | | | | | | |
| **Connections** | | | | | 2) | | | | | | | | | | | |
| Cable: Thread M20 x 1.5 Air pipe: Thread G 1/4 | | | | | | | 1 | | | | | | | | | |
| Cable: Thread M20 x 1.5 Air pipe: Thread 1/4-18 NPT | | | | | | | 2 | | | | | | | | | |
| Cable: Thread 1/2-14 NPT Air pipe: Thread 1/4-18 NPT | | | | | | | 3 | | | | | | | | | |
| **Option module for shutdown function** | | | | | | | | | | | | | | | | |
| without | | | | | | | | 0 | | | | | | | | |
| Plug-in module for shutdown function | | | | | | 3) | | 5 | | | | | | | | |
| **Optional mechanical kit for digital position feedback** | | | | | | | | | | | | | | | | |
| without | | | | | | | | | 0 | | | | | | | |
| Mechanical kit for digital position feedback | | | | | | | | | | | | | | | | |
| with proximity switches SJ2-SN (NC or logical 1) | | | | | | | | | 1 | | | | | | | |
| with proximity switches SJ2-S1N (NO or logical 0) | | | | | | | 4) | | 2 | | | | | | | |
| with 24 V DC/AC microswitches (change-over contacts) | | | | | | | 5) | | 3 | | | | | | | |
| **Design (varnish / coding)** | | | | | | | | | | | | | | | | |
| Standard | | | | | | | | | | | 1 | | | | | |
| As specified (on request) | | | | | | | | | | | 2 | | | | | |
| **Device identification label** (provide list, if available) | | | | | | | | | | | | | | | | |
| without | | | | | | | | | | | | 0 | | | | |
| label including text (plain text, max. 16 letters) | | | | | | | | | | | | | | | | |
| with separate sticker | | | | | | | | | | | | 1 | | | | |
| with separate stainless steel label 18.5 x 65 mm | | | | | | | | | | | | 2 | | | | |

Continued on next page

1) only with cable connection NPT thread
2) EEx d cable glands see accessories
3) only for fail safe pneumatic
4) only for ambient temperature range -25...+85 °C
5 only for Ex d version

## 8.1 Additional ordering information

| TZIDC-210 | | Code | | | |
|---|---|---|---|---|---|
| **Certificates** | | | | | |
| Certificate of compliance | with the order acc. to EN 10204-2.1 (DIN 50049-2.1) | CF1 | | | |
| Certificate of compliance | with the order acc. to EN 10204-2.1 (DIN 50049-2.1) with item description | CF2 | | | |
| Test Report acc. to EN 10204-2.2 (DIN 50049-2.2) | | CF3 | | | |
| Inspection certificate | 3.1 acc. to EN 10204 with max. deviation | CBA | | | |

## 8.2 Order information, accessories 1a

| | | Catalog No. | Code | | | |
|---|---|---|---|---|---|---|
| **Mounting material and cost** | | | | | | |
| Attachment kit for linear actuators | | | | | | |
| (lateral attachment to DIN/IEC 534 / NAMUR) | stroke 10 ... 35 mm | 7959125 | | | | |
| | stroke 20 ... 100 mm | 7959126 | | | | |
| Attachment kit for rotary actuators (mounting to VDI/VDE 3845) | | | | | | |
| consisting of: | | | | | | |
| a) Adapter (shaft coupler) | | 7959110 | | | | |
| b) Mounting bracket | dimension A/B = 80/20 mm | 319603 | | | | |
| | dimension A/B = 80/30 mm | 319604 | | | | |
| | dimension A/B = 130/30 mm | 319605 | | | | |
| | dimension A/B = 130/50 mm | 319606 | | | | |

Continued on next page

## 8.3 Order information, accessories 1b

| TZIDC-210 | | | Catalog No. | Code | | | |
|---|---|---|---|---|---|---|---|
| **Pressure gauge block** | including attachment material | | | | | | |
| for single acting TZIDC-210 | with 2 pressure gauges Ø 28 mm | | | | | | |
| (1 x for air supply and 1 x for output pressure) | | | | | | | |
| G 1/4 connections | Supply pressure range | | | | | | |
| | 0...10 bar/ 0...140 psi | | | | | | |
| | Output pressure range | 0...4 bar/ 0...60 psi | 7959111 | | | | |
| | | 0...10 bar/ 0...140 psi | 7959112 | | | | |
| 1/4-18 NPT connections | Supply pressure range | | | | | | |
| | 0...10 bar/ 0...140 psi | | | | | | |
| | Output pressure range | 0...4 bar/ 0...60 psi | 7959113 | | | | |
| | | 0...10 bar/ 0...140 psi | 7959114 | | | | |
| for double acting TZIDC-210 | with 3 pressure gauges Ø 28 mm | | | | | | |
| (1 x for air supply and 2 x for output pressure) | | | | | | | |
| G 1/4 connections | Supply pressure range | | | | | | |
| | 0...10 bar/ 0...140 psi | | | | | | |
| | Output pressure range | 0...4 bar/ 0...60 psi | 7959115 | | | | |
| | | 0...10 bar/ 0...140 psi | 7959116 | | | | |
| 1/4-18 NPT connections | Supply pressure range | | | | | | |
| | 0...10 bar/ 0...140 psi | | | | | | |
| | Output pressure range | 0...4 bar/ 0...60 psi | 7959117 | | | | |
| | | 0...10 bar/ 0...140 psi | 7959118 | | | | |
| (Pressure gauge blocks are delivered as separate units for mounting by the customer) | | | | | | | |
| **Filter regulator, brass** | incl. material for mounting to pressure gauge block | | | | | | |
| connections | thread G 1/4 | | 7959119 | | | | |
| | thread 1/4-18 NPT | | 7959120 | | | | |
| (Filter regulators are delivered as separate units for mounting by the customer) | | | | | | | |
| **Operating program for digital communication** | | | | | | | |
| DSV401 (SMART VISION) | on CD-ROM | see Data Sheet 10/63-1.20 EN | | | | | |
| **EEx d cable glands** | | 6) | | | | | |
| 1 x EEx d cable gland M20 x 1.5, 1 pipe plug M20 x 1.5, securing adhesive | | | 7959244 | | | | |
| 2 x EEx d cable glands M20 x 1.5, securing adhesive | | | 7959245 | | | | |
| 1 x EEx d cable gland 1/2" NPT, 1 pipe plug 1/2" NPT, securing adhesive | | | 7959246 | | | | |
| 2 x EEx d cable glands 1/2" NPT, securing adhesive | | | 7959247 | | | | |

6) for cable diameter 7.2...11.7 mm

## 8.4 Order information, accessories 2

| TZIDC , TZIDC-110, TZIDC-120, TZIDC-200, TZIDC-210, TZIDC-220 | | | Catalog No. | | | |
|---|---|---|---|---|---|---|
| **Attachment kit for** | **Manufacturer / Type** | | | | | |
| Air Torque | SC 30 | 9) | 319604 | | | |
| Air Torque | SC-P-60-4 | 9) | 319604 | | | |
| Air Torque | SR 30 | 9) | 319603 | | | |
| ARI | DP32, DP33, DP34 | | 7959125 | | | |
| AMG | SAD 010 ... SAF 040 | 9) | 319603 | | | |
| AMG | SAD 040 ... SAF 050 | 9) | 319605 | | | |
| ARCA | 812 stroke 30 mm | | 7959107 | | | |
| ARCA | 812 stroke 60 mm | | 7959106 | | | |
| ARCA | 813 stroke 30 mm | | 7959109 | | | |
| ARCA | 813 stroke 60 mm | | 7959108 | | | |
| Automax | DA 85 ... DA150 | 9) | 319603 | | | |
| Badger Meter | ATC 754/755 | | 7959123 | | | |
| bar | GTE / GTD 045 ... 127 | 9) | 319604 | | | |
| bar | GTE / GTD 143 ... 254 | 9) | 319605 | | | |
| Bray | 92 / 93 series | 9) | 319603 | | | |
| Conovalve | Series 740.000 / 750.000 / 770.000 / 795.000 | | 7959125 | | | |
| El-O-Matic | ED / ED / PE / PD 500 ... 4004 | 9) | 319605 | | | |
| El-O-Matic | ED / ED / PE / PD 25 ... 350 | 9) | 319603 | | | |
| FESTO | DRD-4-F05 ... DRD-50F10 | 9) | 319603 | | | |
| FESTO | DRD-77-F10 ... DRD-255-F14 | 9) | 319605 | | | |
| Fisher | 1051-30, 1052-30 | | 7959214 | | | |
| Fisher | 1061 size 130 | | 7959206 | | | |
| Fisher | 471 | | 7959195 | | | |
| Fisher | 585 C | | 7959250 | | | |
| Fisher | 657 / 667 Size 10 ... 30 mm | | 7959177 | | | |
| Flow Serve | DA 85 ... 150 | 9) | 319603 | | | |
| Foxboro | FoxPak IP127 / V725 | | 7959168 | | | |
| Foxboro | V713 stroke 10 ... 35 mm | | 7959125 | | | |
| Foxboro | V713 stroke 25 ... 90 mm | | 7959126 | | | |
| GEFA | AC 020 ... AC 1750 | 9) | 319604 | | | |
| GEFA | MC 063 FA | 9) | 319603 | | | |
| GEMÜ | 690/25 and 50 | | 7959103 | | | |
| GEMÜ | CleanStar | | 7959125 | | | |
| Gulde | DK | | 7959161 | | | |

9) need additional Adapter (Shaft Coupler), Catalog No. 7959110

## 8.5 Order information, accessories 3

| **TZIDC , TZIDC-110, TZIDC-120, TZIDC-200, TZIDC-210, TZIDC-220** | | | Catalog No. | | | |
|---|---|---|---|---|---|---|
| **Attachment kit for** | **Manufacturer / Type** | | | | | |
| Honeywell | 600-11, 600-15 | | 7959126 | | | |
| Hytork | XL26 ... XL680 | 9) | 319603 | | | |
| Hytork | XL1125, XL1370, XL2585, XL4580 | 9) | 319605 | | | |
| Keystone | 79U/E-002(S) ... 79U/E-181(S) | | 7959147 | | | |
| Mapag | A/F 30 ... A/F 500 | 9) | 319603 | | | |
| Masoneilan | CAMFLEX II, VARIMAX, MINITORK II | | 7959144 | | | |
| Masoneilan | VariPak 28000 series | | 7959163 | | | |
| MaxFlo | MaxFlo | | 7959140 | | | |
| NAF | 791290 | | 7959207 | | | |
| NAMUR | stroke 10 ... 35 mm | | 7959125 | | | |
| NAMUR | stroke 25 ... 90 mm | | 7959126 | | | |
| NAMUR | stroke 100 ... 170 mm | | 7959339 | | | |
| NELES | B1JU8, B1J8U, B1CU9/20E, B1CU17/55, B1CU13-32, B1C6U-20U, 1JAU10/20, BC6U-20U | 9) | 319603 | | | |
| NELES | BC6-20, B1C6-20, BJ8-20, B1J8-20 | | 7959146 | | | |
| Norbro | 10AR40, 20BR40, 20AR40, 20RDA40, 15AR40, 15BR40 | 9) | 319603 | | | |
| Norbro | 25AR40, 25BR40, 35AR40, 35BR40, 33-40, 30AR40 | 9) | 319604 | | | |
| Norbro | 45BR40, 45AR40 | 9) | 319606 | | | |
| Prisma | PP10, PP20 | 9) | 319604 | | | |
| Prisma | PPW | 9) | 319603 | | | |
| Remote Control | RCD 05-DA/SR ... RCD 60-DA/SR | 9) | 319603 | | | |
| Revo | FD/FS 12, 25, 50 | 9) | 319603 | | | |
| Revo | FD/FS 90, 130, 180, 205, 306 | 9) | 319605 | | | |
| Richter | RA-1/2 046 ... RA-1/2 127 | 9) | 319604 | | | |
| Richter | RA-1/2 185 ... RA-1/2 300 | 9) | 319605 | | | |
| Samson | 241, 271, 3271 | | 7959145 | | | |
| Samson | 3277 | | 7959136 | | | |
| Schubert&Salzer | GS 8020 / 8021 / 8023 | | 7959200 | | | |
| SED | SED stroke 100 mm | | 7959141 | | | |
| VDI / VDE 3845 | 80 / 20 mm | 9) | 319603 | | | |
| VDI / VDE 3845 | 80 / 30 mm | 9) | 319604 | | | |
| VDI / VDE 3845 | 130 / 30 mm | 9) | 319605 | | | |
| VDI / VDE 3845 | 130 / 50 mm | 9) | 319606 | | | |

9) need additional Adapter (Shaft Coupler), Catalog No. 7959110

ABB has Sales & Customer Support expertise in over 100 countries worldwide.

**www.abb.com/instrumentation**

The Company's policy is one of continuous product improvement and the right is reserved to modify the information contained herein without notice.

Printed in the Fed. Rep. of Germany (07.2007)

© ABB 2007

3KXE341005R1001

10/18-0.33-EN Rev. B

**ABB Limited**
Salterbeck Trading Estate
Workington, Cumbria
CA14 5DS
UK
Tel: +44 (0)1946 830 611
Fax: +44 (0)1946 832 661

**ABB Inc.**
125 E. County Line Road
Warminster, PA 18974
USA
Tel: +1 215 674 6000
Fax: +1 215 674 7183

**ABB Automation Products GmbH**
Schillerstr. 72
32425 Minden
Germany
Tel: +49 551 905-534
Fax: +49 551 905-555
CCC-support.deapr@de.abb.com